Boise State University
Department of Electrical and Computer Engineering
ECE 212L Circuit Analysis and Design Lab
Fall 2025

Formal Report

Final Design Project: 2-Band Audio Equalizer

Date Performed: 12/5/2025
Date Due: 12/12/2025
Date Submitted: 12/12/2025

Instructor: Dr. Jennifer Houle

Group Members: Keona Arneson
Kevin Nguyen

TABLE OF CONTENTS

1. INTRODUCTION 3
2. BACKGROUND THEORY 3
3. TECHNICAL CONTENT 4
3.1 Part A 4
3.2 Part B 9
3.3 Part C 16
4. BROADER IMPACTS 24
4.1 Public Health, Safety, and Welfare 24
4.2 Economy 25
4.3 Environmental Factors 25
5. CONCLUSION 26
6. REFERENCES 28
APPENDIXES 29
Appendix 1: Derivations of Transfer Functions 29
Appendix 2: Determining Center Frequencies 30
Appendix 3: Component Value Calculations 30

1. INTRODUCTION

Active filtering plays a crucial part in the modern world, being used for harmonics, reactive power compensation, and other solutions [1]. In this report, the theory, design, and simulation of a 2-band audio equalizer will be presented. The audio equalizer will utilize an active band-pass filter design and will have potentiometers to control the gain of two bands. The testing and simulating process will be done with LTspice and MATLAB to verify the design. This process will simulate a real-world op-amp, the LM741, as well as an ideal op-amp.

2. BACKGROUND THEORY

Our design utilizes active band-pass filters, and it is important to know how they work. In this section, the theory of how active band-pass filters functions will be explained in thorough detail.

There are two important terms to know, the cutoff frequency, denoted f_c, and the center frequency, denoted f_0. The cutoff frequency refers to when the filters magnitude is roughly at 70% of the maximum. The center frequency is the correlating frequency when the magnitude is at its maximum. These terms should be remembered as it will be crucial for our design process.

In Figure 1, we have a block diagram of our active band-pass filter. We want the cutoff frequency of the high-pass filter to be lower than the cutoff frequency of the low-pass filter. Since this is in series, the order of the blocks does not affect the output. The f_c of the low-pass filter minus the f_c of the high-pass filter is also known as the bandwidth. We can find the center frequency of the band pass filter by finding the center of the two cutoff frequencies.

The amplification block is responsible for amplifying the output of the band-pass filter. Amplification blocks are not always necessary for designs, and the band-pass filter will operate fine without it. In our design, we will implement an amplification block, but it will have a gain of -1, which essentially has no effect on the circuit output.

Figure 1: Block Diagram of an Active Band-Pass Filter

In our design, the high-pass and low-pass filters will be active, meaning they both will use an op-amp, which allows us to add gains to them.

The following section went over the background theory of how active band-pass filters operate. The implementations of active band-pass filter can look different but always comprise of a high-pass and low-pass filter.

3. TECHNICAL CONTENT

3.1 Part A

Taken from [2], Figure 2 presents the complete bandpass filter schematic. This design is the same block diagram from Figure 1, just in schematic form.

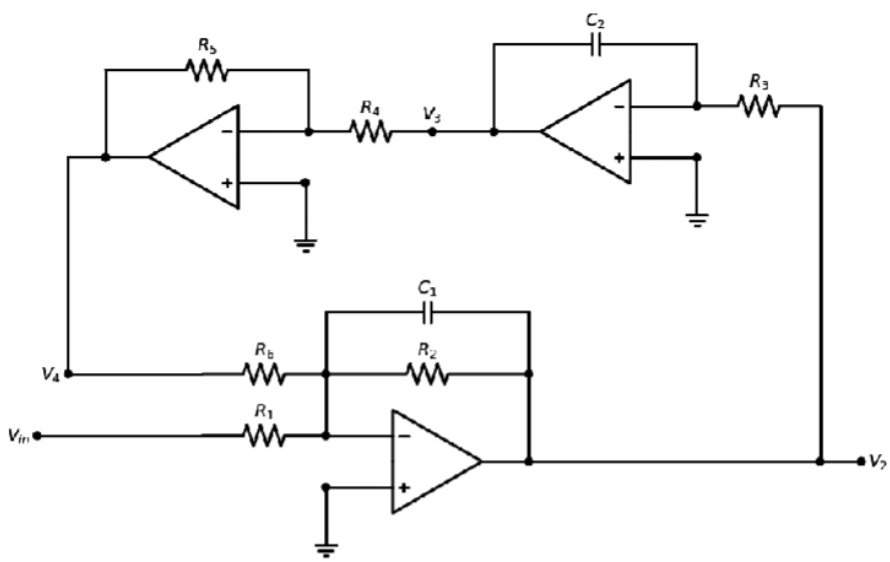

Figure 2: Complete Bandpass Filter Circuit Schematic

To find the gain of an inverting op-amp,

$$H(jw) = \frac{V_o}{V_{in}} = -\frac{R_f}{R_{in}} \tag{1}$$

can be used. This equation will be how we analyze the individual op-amps.

Each operational amplifier is separated into parts to determine component values. Figure 3 depicts stage 2 of the bandpass filter, specifically the inverting operational amplifier with a capacitor in the feedback loop.

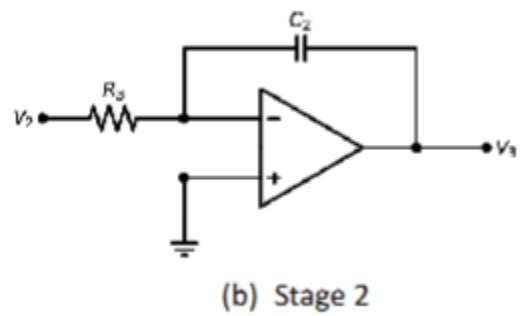

Figure 3: Stage 2 of Bandpass Circuit

The following equation is determined to be

$$H_2(j\omega) = \frac{-1}{j\omega R_3 C_2} \qquad (2).$$

Equation 2 is the determined transfer function according to its configuration as an inverting operation amplifier. Next, Figure 4 depicts in the same configuration of inverting operational amplifier as shown with capacitors replaced with resistor.

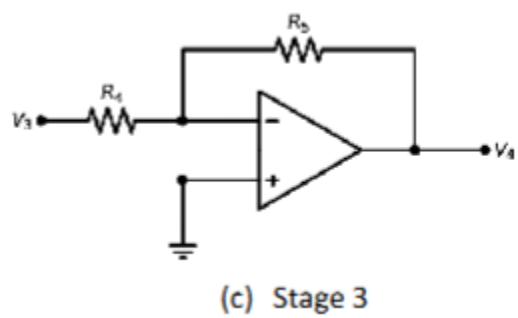

Figure 4: Stage 3 of Bandpass Circuit

The following transfer function equation 2 is

$$H_3(j\omega) = \frac{-R_5}{R_4} \qquad (2),$$

determined by Figure 4.

Figure 5 shows the final stage with a capacitor and resistor in parallel for the feedback loop. Along with two other resistors in parallel into the inverting node of the operational amplifier.

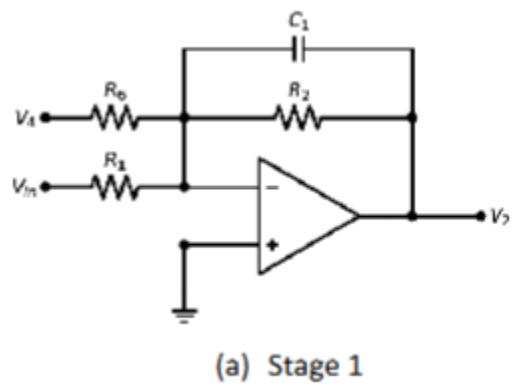

Figure 5: Stage 1 of Bandpass Circuit

Figure 5's transfer function is derived and simplified as

$$H_1(j\omega) = \frac{-j\omega R_2 R_3 R_4 R_6 C_2}{R_1 R_2 R_5 + (j\omega)^2 R_1 R_2 R_3 R_4 R_6 C^2 + j\omega R_1 R_3 R_4 R_6 C} \quad (3).$$

Derivation of equation 3 is found in Appendix 1. Further simplification to the stage 1 transfer function can be done assuming $R_u = R_4 = R_5$, and $R = R_3 = R_6$. As well as rearranging the equation to be in standard form as follows:

$$H_1(j\omega) = -\left[\frac{j\omega\left(\frac{R_2}{R_1}\right)\left(\frac{1}{R_2 C}\right)}{(j\omega)^2 + (j\omega)\left(\frac{1}{R_2 C}\right) + \left(\frac{1}{R^2 C^2}\right)}\right] \quad (4)$$

In the 2-band audio equalizer, two bandpass filters are required. The predetermined values are both set to a gain of 5 V/V and a quality factor (Q) of 10. The center frequencies are 6380 Hz and 10140 Hz. How we obtain these center frequencies will be shown in Appendix 2. The Following equations are used to determine unknown values:

$$K = \frac{R_2}{R_1} \quad (5)$$

$$\beta = \frac{1}{R_2 C} \quad (6)$$

$$\omega_0 = \frac{1}{RC} \tag{7}$$

$$Q = \frac{R_2}{R} \tag{8}$$

$$f_0 = \frac{\omega_0}{2\pi} \tag{9}$$

Equations 5 through 9 are used to determine components and other values which are as seen in table 1. Calculations of values are found in Appendix 3.

Component	BPF #1	BPF #2
K	5 V/V	5 V/V
β	1,014 Hz	638 Hz
f_0	10,140 Hz	6380 Hz
Q	10	10
R	1,569.6 Ω	2494.6 Ω
R_u	5,000 Ω	10,000 Ω
R_1	3,139.2 Ω	4989.2 Ω
R_2	15,696 Ω	24945.9 Ω
C	0.01 μF	0.01 μF

Table 1: Component Values

Now that we have designed and found the values of our two bandpass filters, we will need to do simulation to ensure that they behave as expected. The following analysis will focus on the bandpass filter with the center frequency of 10,140 Hz. The simulation of the bandpass filter with a center frequency of 6380 Hz will be ignored as it is very redundant and the design is very similar.

The transfer function with the calculated values is plotted as a bode diagram in MATLAB. The bode diagram confirms center frequency and magnitude are as expected according to values calculated in table 1. Figure 6 and 7 shows the bode diagram with center and cutoff frequencies,

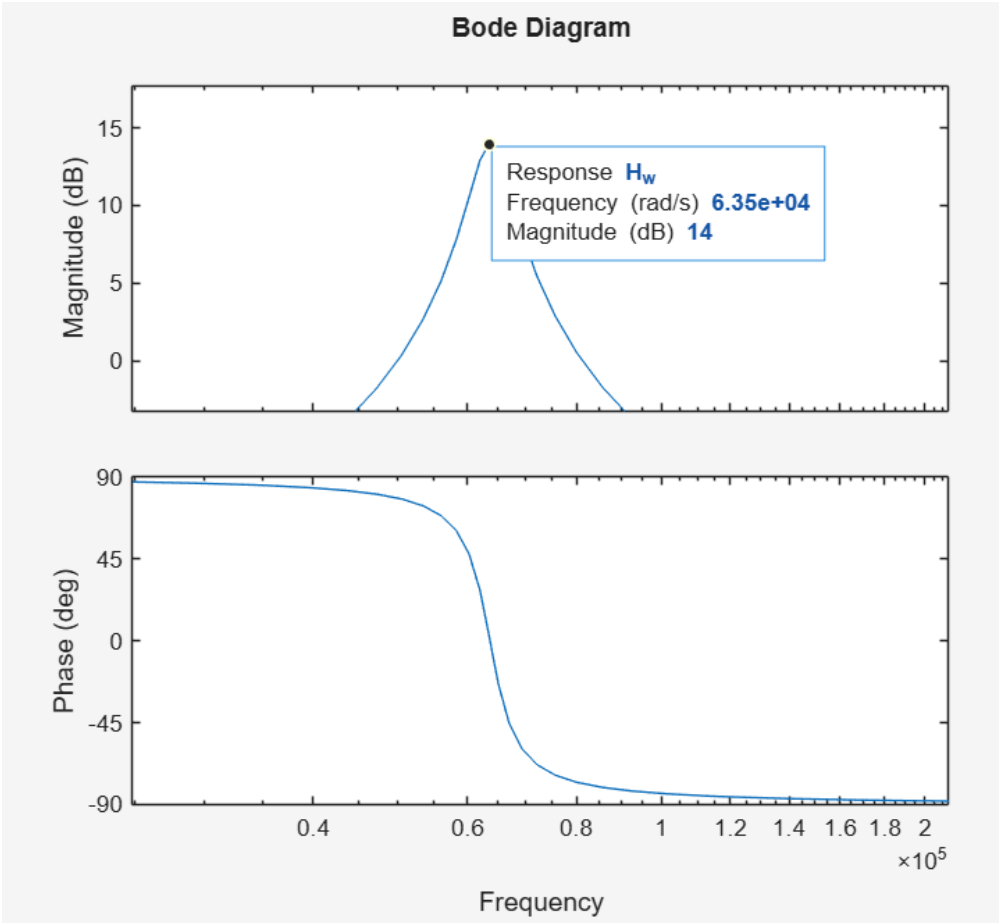

Figure 6: Bode plot at center frequency

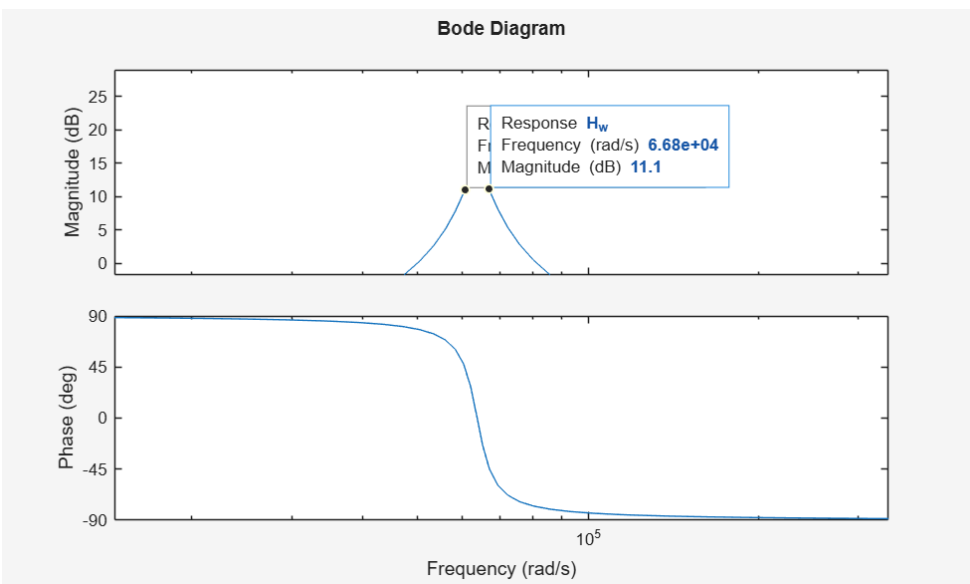

Figure 7: Body plot including bandwidth

Note, Figure 6 and 7 units are shown in radians per second. Figure 6 shows a center frequency to be 63,500 rad/s, converting to hertz, 10,106 Hz is given. 10,106 Hz is close to the predetermined value of 10,140 Hz as expected. In addition, Figure 6 shows magnitude to be 14 dB, converting to V/V to determine gain, 5.01 V/V is given. The result closely matches the target of 5 V/V for gain.

3.2 Part B

The Figure 2 schematic will be constructed in LTspice, using the values bandpass filter with the center frequency of 10,140 Hz. The schematic will also use the LM741, which is a non-ideal op-amp and will behave slightly different of an ideal op-amp. In Figure 8, there is a LTspice schematic with the correlating values. The bandpass filter for the center frequency at 6380 Hz is the same schematic as shown in Figure 8, just different valued resistors.

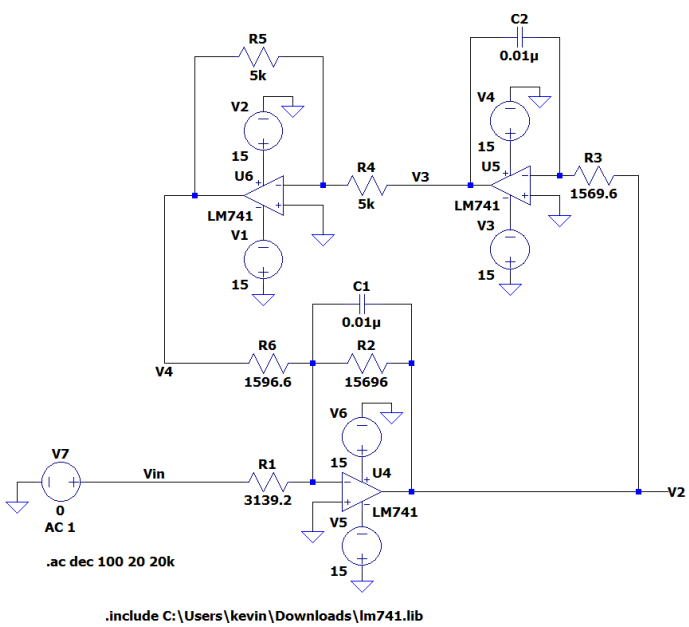

Figure 8: LTspice Bandpass Filter Schematic

An AC simulation is ran using the schematic in Figure 8, with a source of 1V with the response plotted from 20 to 20kHz. The simulation done through LTspice lets us verify our results from MATLAB as well as use non-ideal op-amps, such as the LM741, to be simulated. Figure 9 and 10 shows the bandwidth and center frequency (10,140 Hz) on Bode plots in the LTspice simulation.

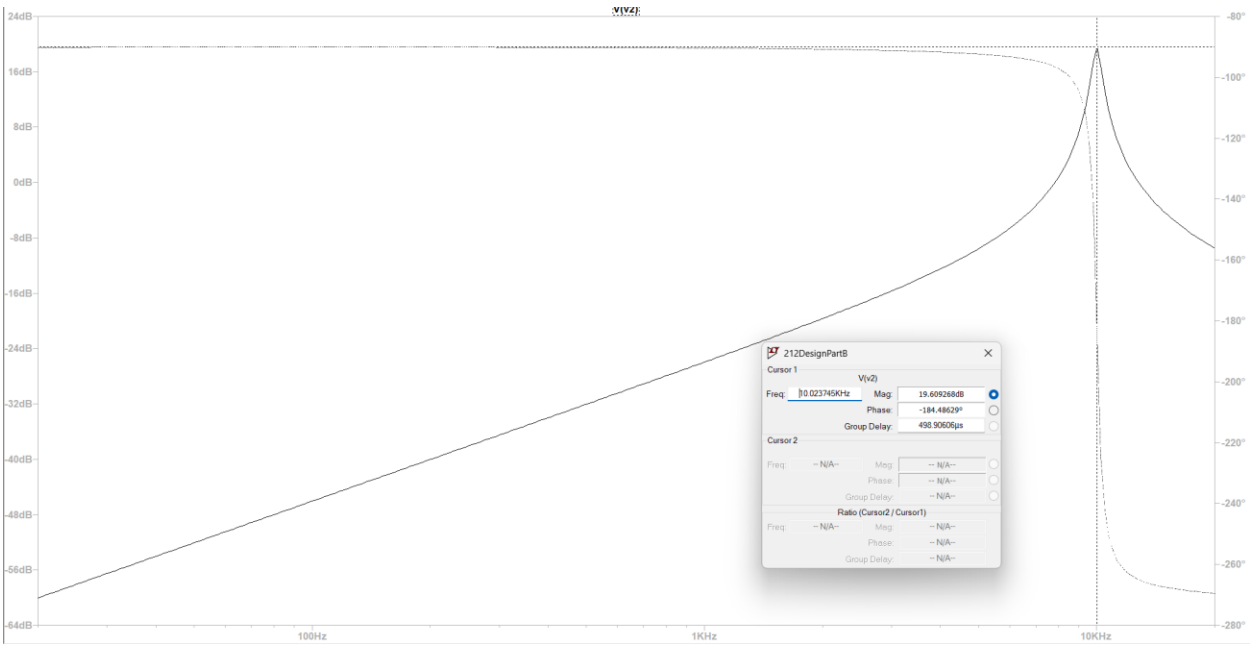

Figure 8: Bode Plot of V_2 of the Circuit Shown in Figure 9 with Cursor at f_0

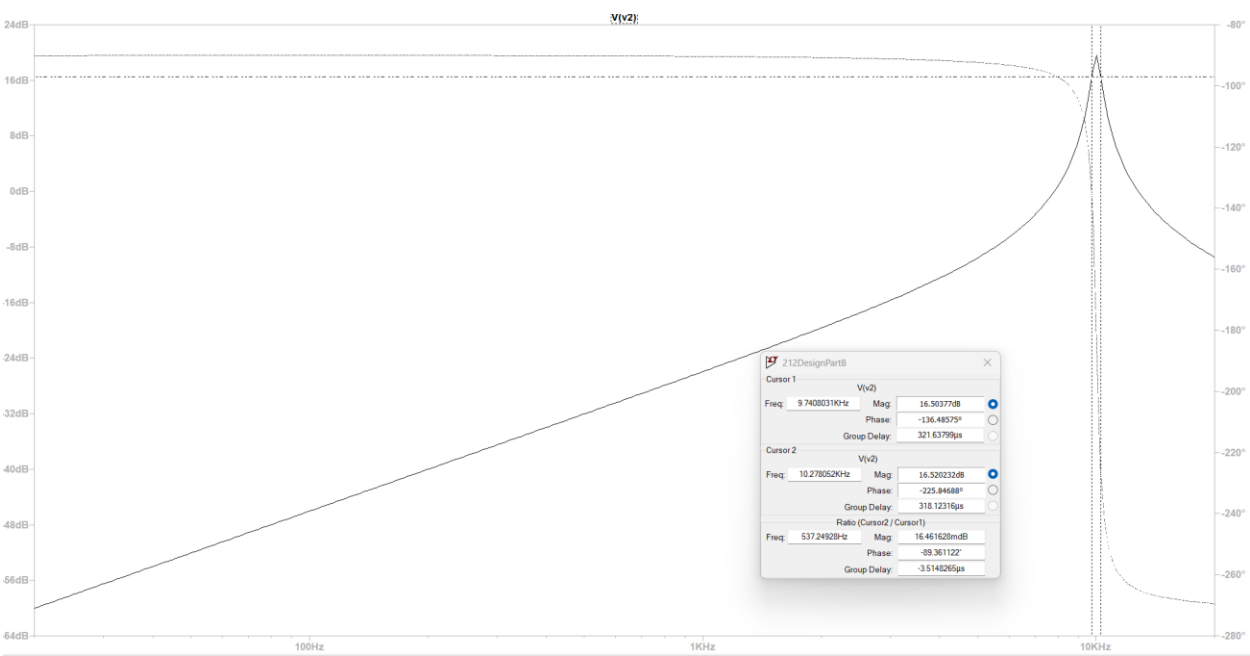

Figure 10: Bode Plot of V_2 of the Circuit Shown in Figure 8 with Cursors at f_{c1} and f_{c2}

From Figure 9 and 10 the following values can be sorted in a data table with comparison of MATLAB values founded in part A. Comparing values simulated from LTspice to MATLAB allows a clear representation if values do not align. Where the frequency from MATLAB is converted from radians to Hertz using the equation

$$f_0 = \frac{\omega}{2\pi} \quad (9).$$

	LTspice Frequency (Hz)	LTspice Magnitude (dB)	MATLAB Frequency (Hz)	MATLAB Magnitude (dB)
f_0	10,024	19.6	10,138	13.9
f_{c1}	9,741	16.5	9,628	10.8
f_{c1}	10,278	16.5	10,663	10.9
$\beta = (f_{c2} - f_{c2})$	537		1,035	

Table 2: LTspice (LM471) vs MATLAB values frequency and magnitudes

Using the data simulated from Figures 9 and 10, the bandwidth has a difference values comparing the LTSpice and MATLAB of 498 Hz, a 63% difference. The bandwidth is not what is expected, this is due to the LM741 op amp and the how the LTSpice simulations run. In addition, the center frequency has a difference of 6 dB which is a 34% difference.

The difference in magnitudes and frequency is due to the slew rate where it is defined as the maximum rate of change of its output voltage. The significance slew rate has on the LM741 op amp is at higher frequencies (e.j. 10,140Hz), the LM471 op amp cannot respond fast enough compared to an ideal op amp. This in return reduces the bandpass filter gain as seen in figure 9 and figure 10. To see if this is present in an “ideal” op-amp, the UniversalOpAmp2 from LTSpice will be used to explore further. In theory, the ideal op-amp should yield results closer to MATLAB’s values from Table 2.

The following exploration will be using the universal op amp 2 as it is an ideal op-amp. Figure 8’s circuit will substitute the LM741 with the UniversalOpAmp2 found by LTspice. Figure 11 now utilizes the UniversalOpAmp2 as a substitute for the LM741 operational amplifier.

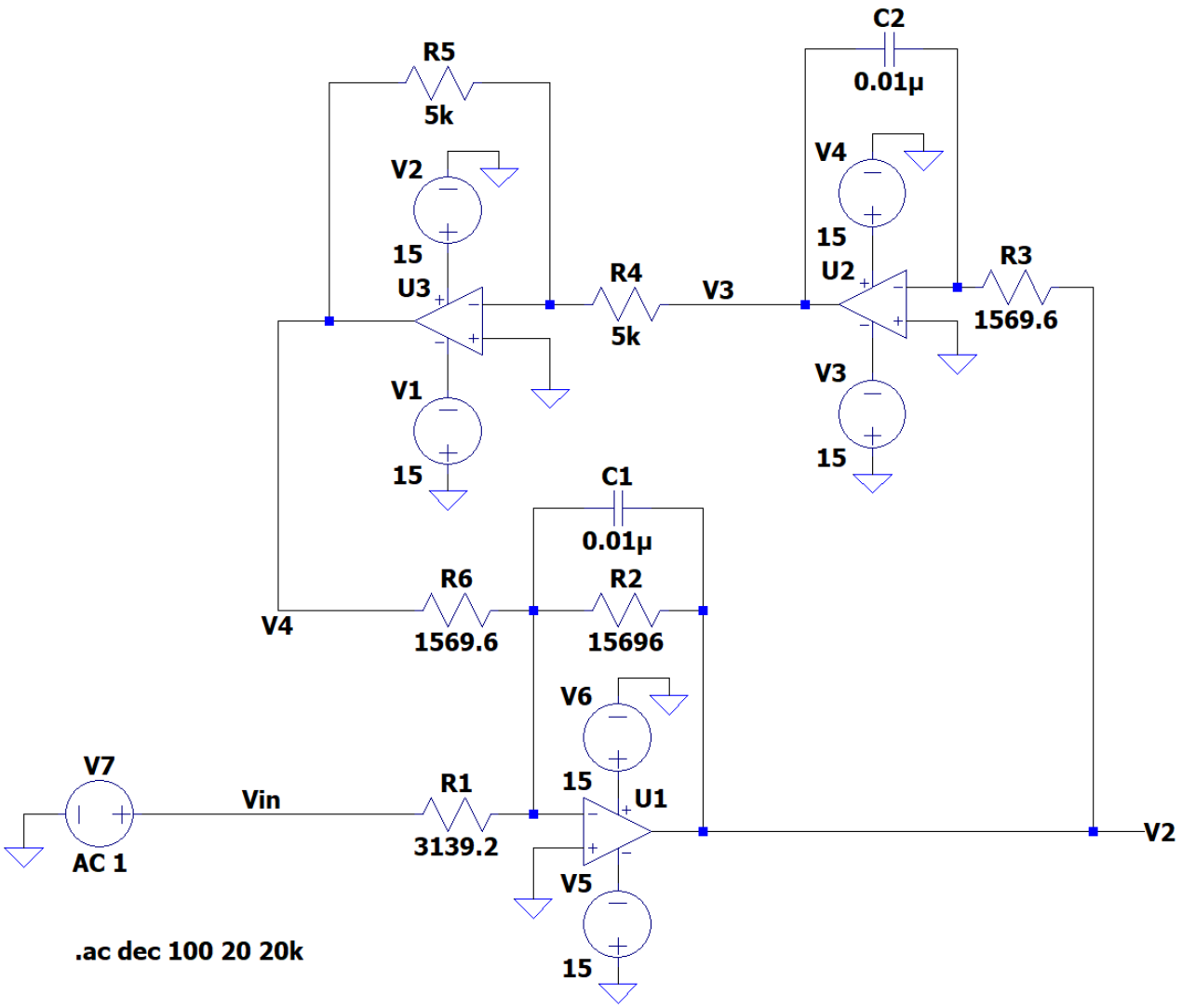

Figure 11: LTspice Bandpass Filter Circuit with UniversalOpAmp2

The same AC simulation is ran with a source of 1V with the response plotted from 20 to 20kHz. Figure 12 and 13 shows the bandwidth and center frequency (10,140Hz) on Bode plots.

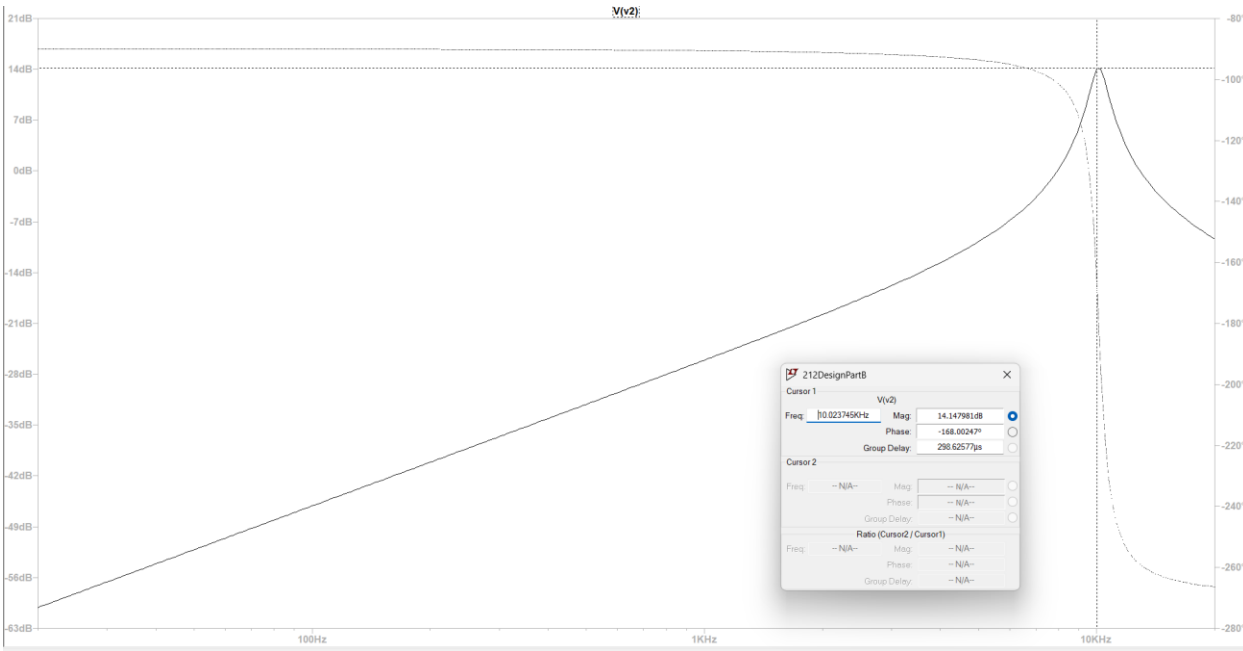

Figure 12: Bode plot of V_2 of the circuit shown in Figure 11 with cursor at f_0

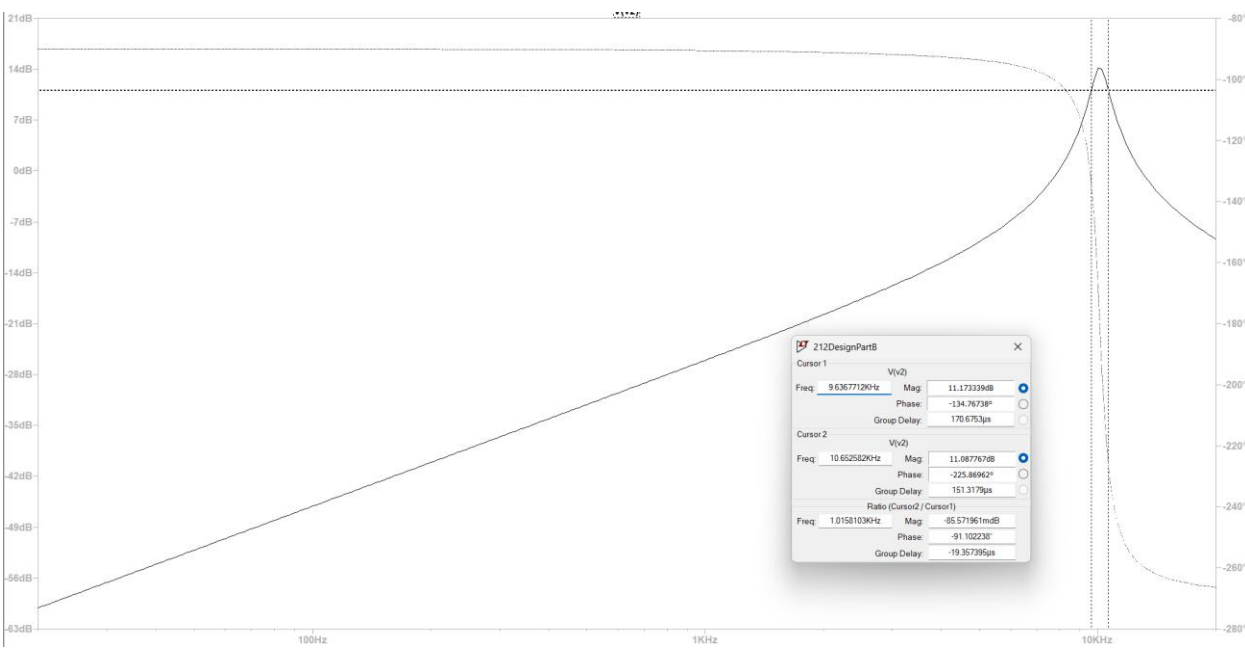

Figure 13: Bode Plot of V_2 of the Circuit Shown in Figure 11 with Cursors at f_{c1} and f_{c2}

A table like Table 2 can be constructed, this time using the values from Figure 12 and 13. Table 3 shows the new values from Figure 12 and 13.

	LTspice Frequency (Hz)	LTspice Magnitude (dB)	MATLAB Frequency (Hz)	MATLAB Magnitude (dB)
f_0	10024	14.3	10,138	13.9
f_{c1}	9,637	10.7	9,628	10.8
f_{c1}	10,653	10.9	10,663	10.9
$\beta = (f_{c2} - f_{c2})$	1,016		1,035	

Table 3: LTSpice (Universal Op amp2) vs MATLAB Values Frequency and Magnitudes

Using the data collected from Figures 12 and 13, the bandwidth has a difference values comparing the LTspice and MATLAB of 19 Hz, which is a 1.85% difference. The difference in bandwidths is lower than the LM471. The center frequencies remain unchanged, magnitude is altered to yield closer results to MATLAB. The universal op amp more closely represents the MATLAB values in terms of frequency and magnitudes. The “ideal” UniversalOpAmp2 simulated in LTSpice yields results closer to the expected MATLAB values.

Next, noise will be used as the input of the bandpass filter. A MATLAB Function is used to generate noise based on the 10,140Hz center frequency. The results are extracted under the file ‘One_Signal_Vin.txt’ and is put as the voltage source shown in Figure 14.

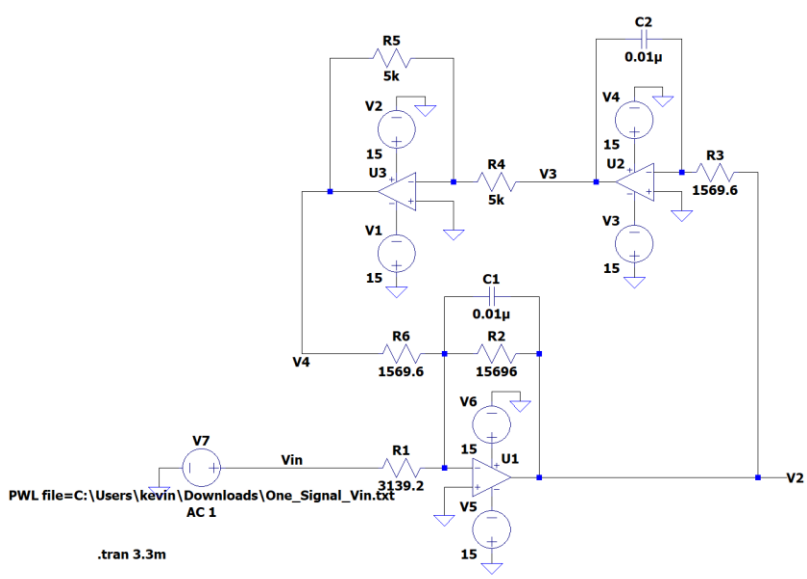

Figure 14: LTSpice Bandpass Filter Circuit with Noise File Generated from MATLAB

The noise will now be applied to the circuit, and a transient simulation is ran for 3.5ms. Figure 15 shows the input signal overlapping the output signal. Figure 16 displays the output signal to clearly show its smoothed signal.

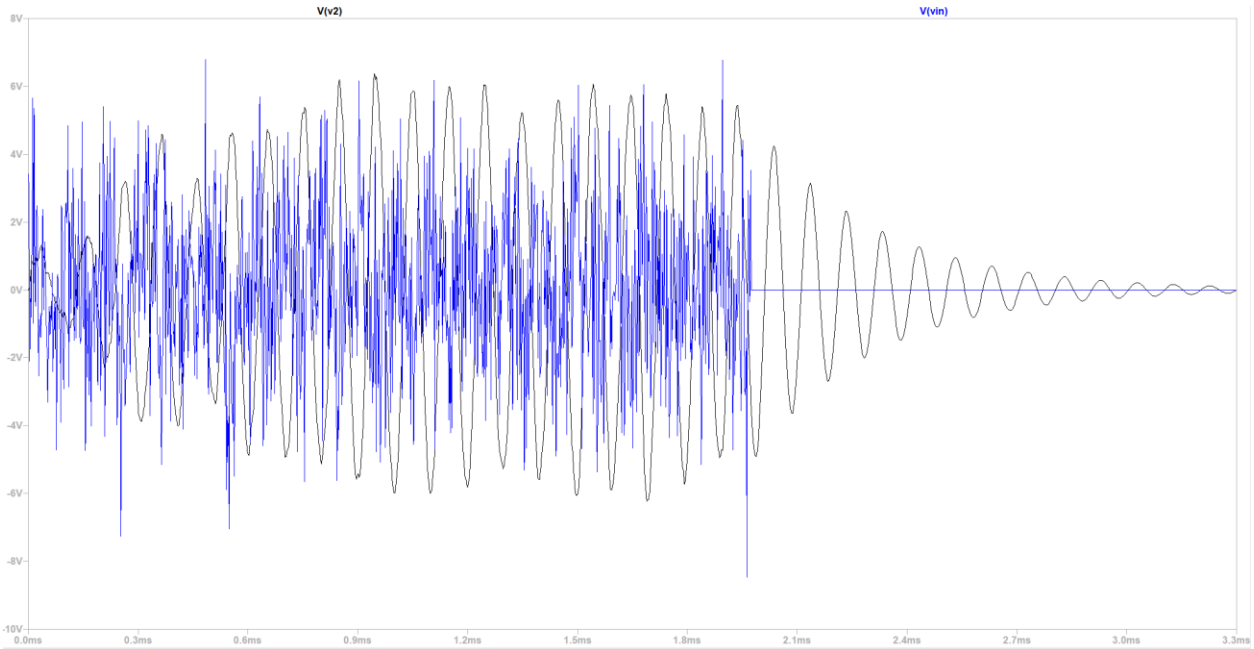

Figure 15: LTspice Plot of Noise signal as Input Source and Output

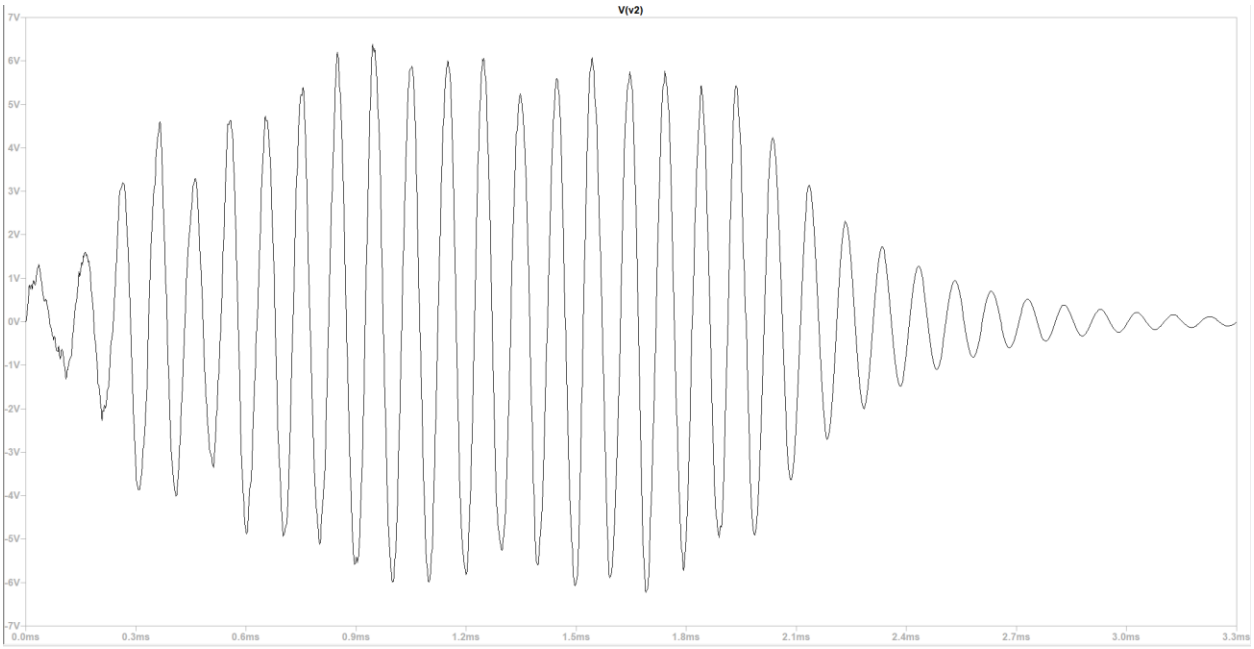

Figure 16: LTspice Plot of Noisey Signal Output with Cursors for 1 Period

Figure 15 represents the blue jagged lines as the noise generated from the MATLAB function. Where the center frequency should be 10,140Hz, the black oscillating wave is the output of the bandpass filter V_2.
The period of 98.7 μs is found by measuring V_2 from Figure 14. The center frequency is found by the equation

$$f_0 = \frac{1}{T_0} \qquad (10).$$

Where the simulated center frequency is 10,131.7 Hz which is a 0.08% difference which closely matches the actual center frequency of 10,140 Hz. The bandpass filter with the UniversalOpAmp2 bandpass filter verifies the circuit works as well as behaving as a high-quality factor bandpass filter. The circuit from Figure 14 will be used for the remainer of the lab.

3.3 Part C

After confirming individual bandpass filter works as expected, both bandpass filters are combined into the final circuit shown in figure 17 below. The other bandpass

filter has a center frequency of 6,380 Hz which is at least a 2 kHz difference. The importance of a 2 kHz center frequency difference is to allow each bandpass filter to control their respective frequency without overlap. The 2kHz cushion comes from the bandwidth values of the filters, ensuring the cutoff frequencies do not overlap. Figure 17 describes the equalizer circuit where the output should yield a bode plot with both peaks as the frequencies of 6,380 and 10,140 Hz respectively.

The purpose of the equalizer circuit is to fine tune the output signal by passing the input signal through multiple band pass filters. In this circuit, two band pass filters are used with a lower band associated with bass or the higher band associated with treble. Potentiometers are modeled in Figure 17 allow adjustable resistances to change the amplitude or gain of each signal.

Figure 17 depicts the complete bandpass circuit combining two bandpass filter circuits. Each potentiometer are modeled with a range of 0 to 1. The potentiometers allow adjustability of the signal strength at a given frequency for each bandpass filter [2]. The outputs each potentiometers are connected to a summing operational amplifier.

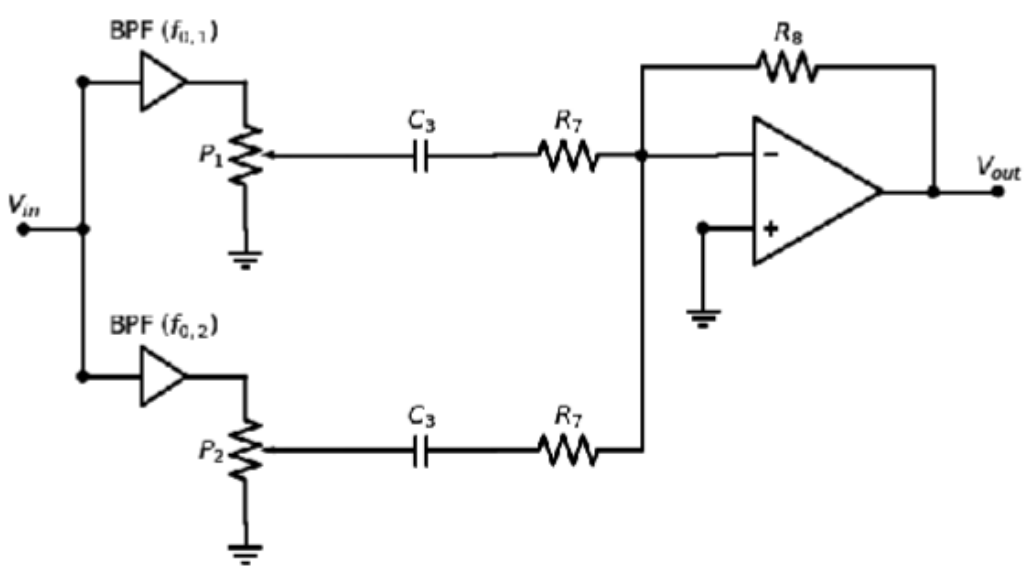

Figure 17: Complete Equalizer Circuit with their Respective Bandpass Filter

The outputs of the bandpass filters are passed through a summing op-amp to allow frequencies to converge and it provides gain correction. Without the summing operational amplifier, the frequencies would not output its original magnitude. The capacitor in line with each bandpass filter output is to block any DC signals [2]. Resistor R7 in series with the capacitor is used to provide proper resistance for the amplifier regardless of the value of the potentiometer. To achieve a gain of 5 V/V when the wipers W0 and W1 are set to 0.5, resistor values R_7, R_8 need to be determined. Since the summing op-amp uses the same resistor of (R_7), it is treated as an inverting op amp. Using equation 1, a ratio of 5 must be maintain, and thus the resistor values R_7 and R_8 are shown in Table 4. Capacitor value is given from [2] as 0.1 μF, leading to values of resistors R_7, R_8 and capacitor C_3 are as follows in Table 4.

Component	Value
resistors R_7	3k Ω
resistors R_8	15k Ω
capacitor C_3	0.1 μF

Table 4: Component Values for Summing Amplifier in Figure 17

Figure 18 depicts the built circuit using values calculated from Table 4, based off the circuit in Figure 17.

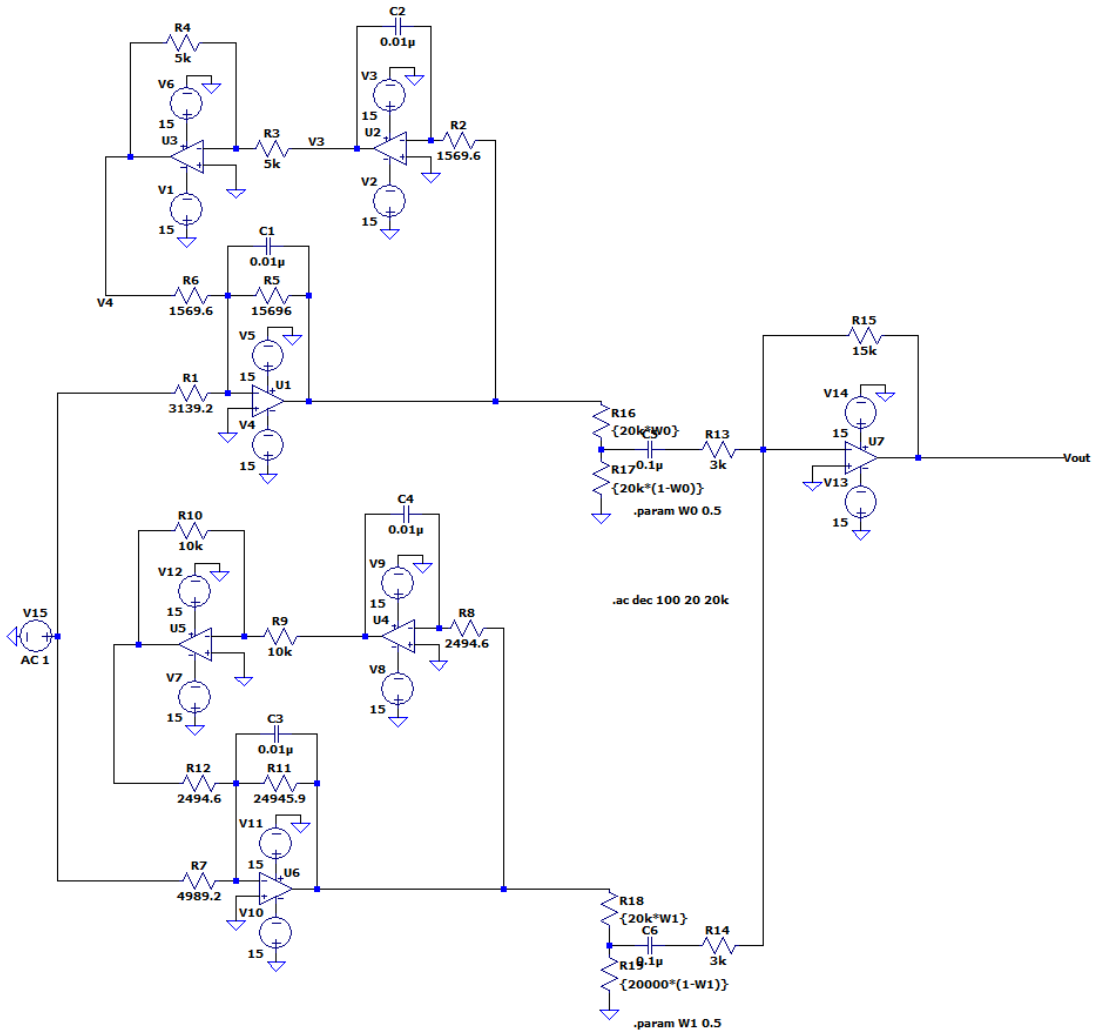

Figure 18: LTspice Complete Equalizer Circuit

An AC simulation is ran with both wiper positions on potentiometers initially set to W0 = W1 = 0.5. Figure 19 shows the bode plot with two peaks at their respective center frequencies of 6,380 Hz and 10,140 Hz,

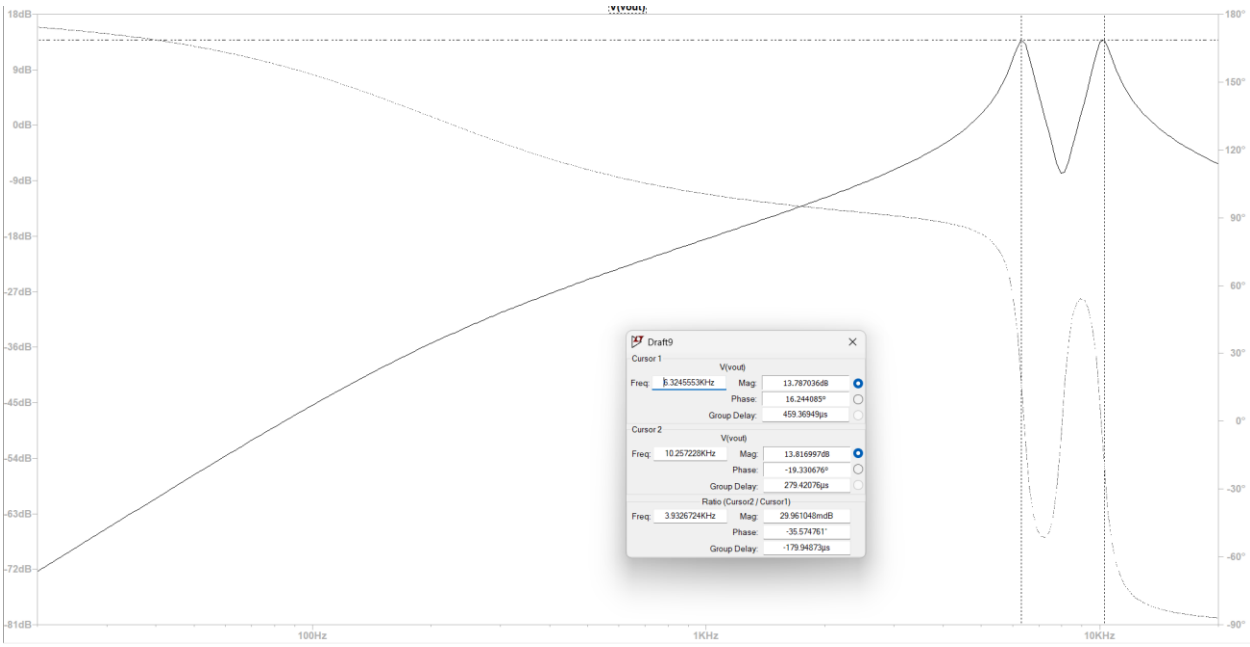

Figure 19: LTspice Equalizer Circuit, W0 = W1 = 0.5

Figure 19 shows the two center frequencies with slight value differences due to how LTspice is simulated. Figure 19 proves the circuit is functioning properly as there are two peaks. The output of the equalizer circuit should yield two peaks at center frequencies close to 6,380 Hz and 10,140 Hz. The magnitudes are close to 14 dB; meaning a gain of 5 V/V when converted. The magnitude is close to 14 dB when converted to V/V gain are close to 5 V/V.

Further simulations are conducted to see how the output is affected by adjusting the potentiometers. First change is W0 set to 0.75 and leave W1 set to 0.5. Figure 20 is the simulation ran after changing the first bandpass filter wiper value,

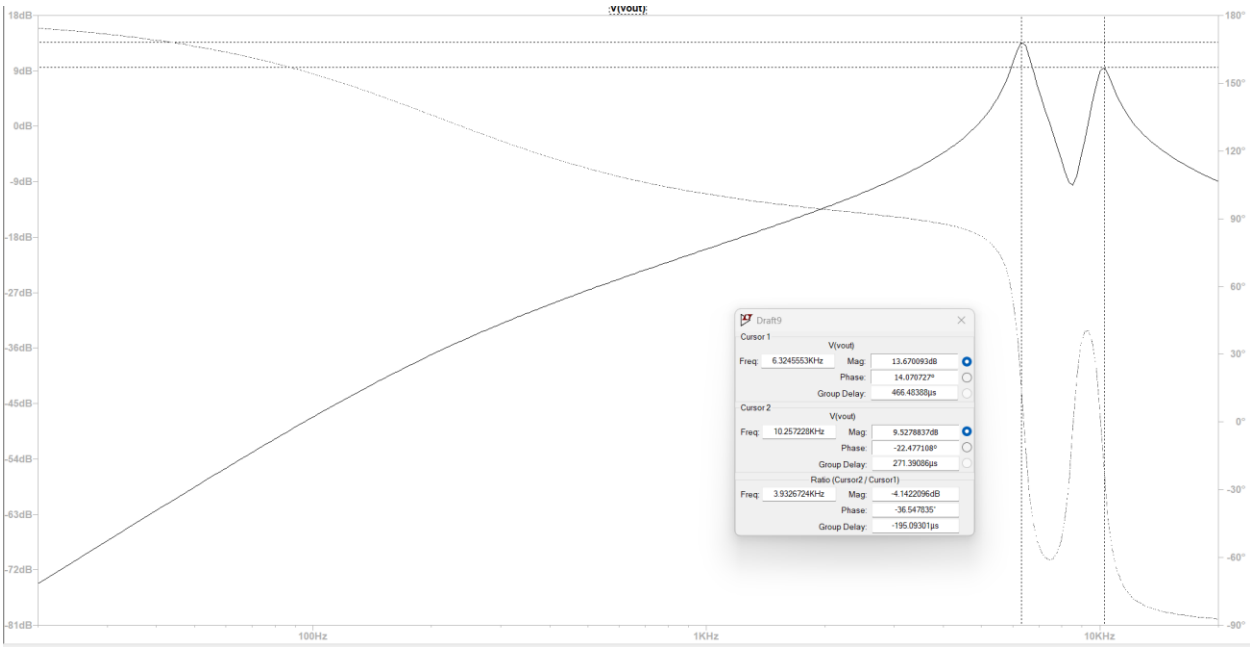

Figure 20: LTspice Equalizer Circuit, W0 = 0.75 W1 = 0.5

Figure 20 shows similar results to Figure 19, however the magnitude at 10.26 kHz is decreased from 13.82 dB to 9.528 dB. Increasing the wiper value W0 causes the gain the decrease. However, center frequency is left unchanged, only the peak heights are altered.

Further simulations are conducted to see if the relationship is inverse between wiper value and magnitude of peak. Figure 21 shows wiper values of W0 = 0.4 W1 = 0.6

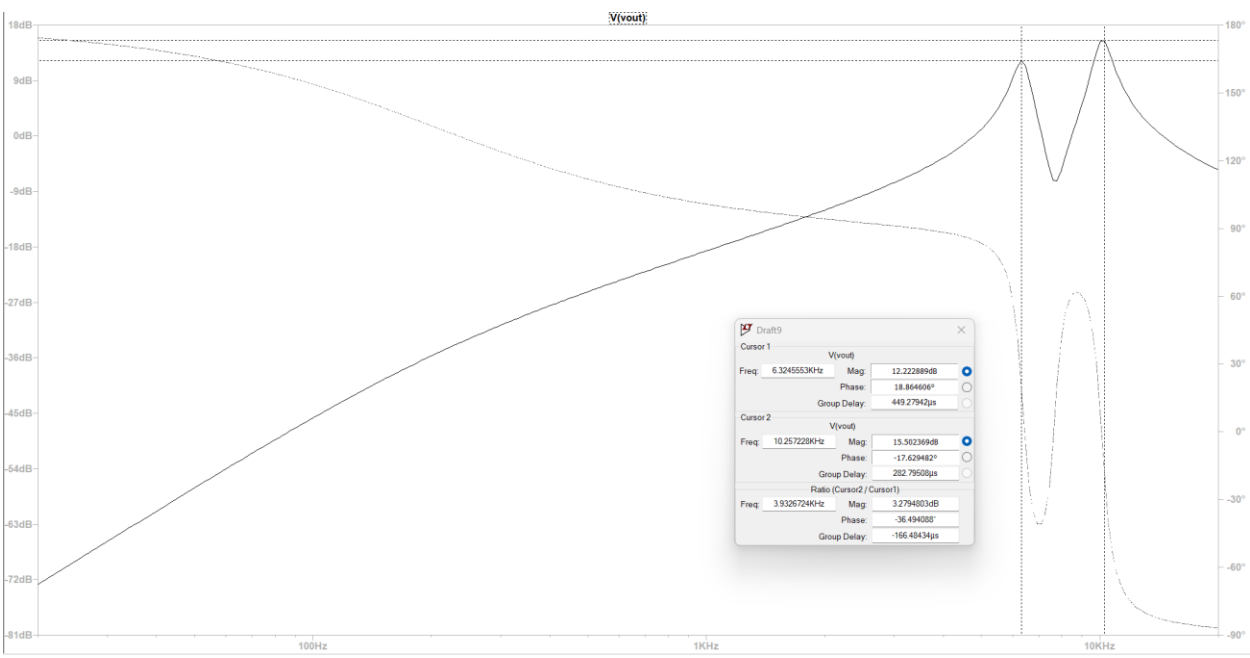

Figure 21: LTSpice Equalizer Circuit, W0 = 0.4 W1 = 0.6

Figure 21 shows similar results to figure 20 as there are two peaks however, with magnitudes different from each other. Increasing wiper value causes peaks to decrease, where decreasing wiper value increases peak values.

A transient simulation is then simulated with both wiper positions of W0 = W1 = 0.5. The voltage supply utilizes another noisy signal generated from MATLAB similar to part B. In the MATLAB file, the lower frequency was changed to 6,380 Hz. Higher frequency changed to 10,140 Hz which is then used to generate the noisy signal. Figure 22 displays the input of Vin for the equalizer circuit.

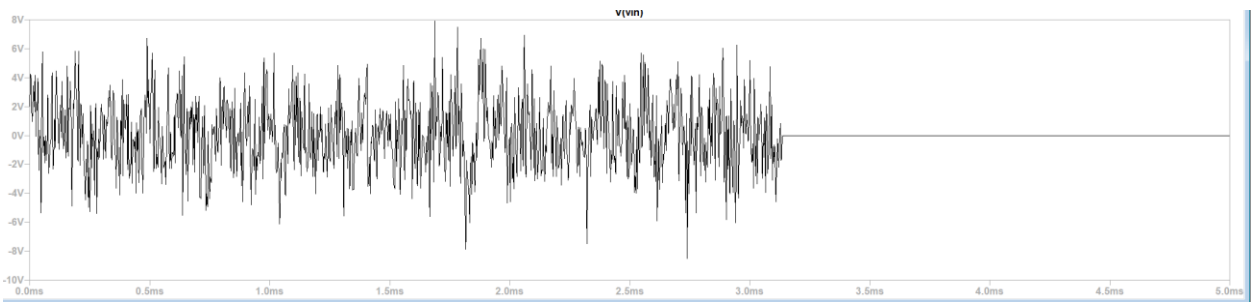

Figure 22: Transient Noisy Signal Vin Plot

In Figure 22, there is no clear pattern recognized. Instead, there are peaks ranging from 0 to 8V. The noisy signal is fed into each bandpass filter shown in figure 18. Generating the noisy signal will allow each bandpass filter to extract specific parts of the spectrum. Figure 23 shows the noisy signal from figure 22 fed into the 10,140 Hz bandpass filter.

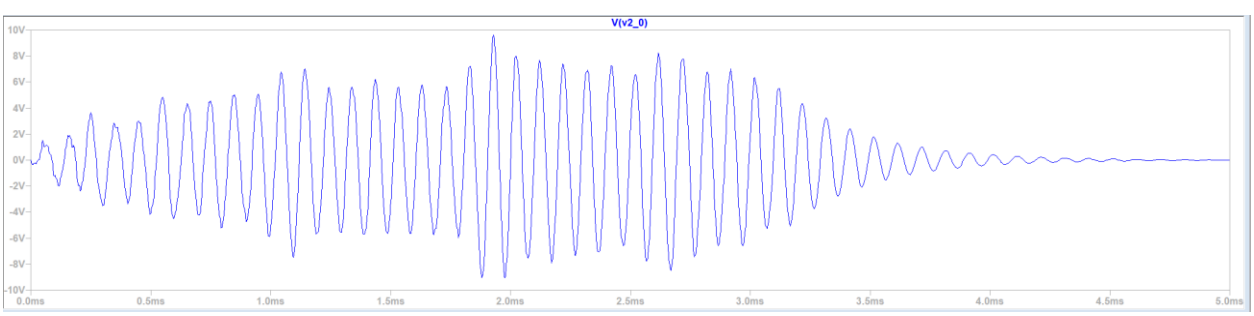

Figure 23: Transient Output Signal V2_0 Plot

Figure 23 no longer shows jagged lines, instead a clear sinusoidal waveform is present. The number of oscillation cycles compared to Figure 24 shows Figure 23 is the higher frequency bandpass filter. After 3ms, the waveform tapers off due to Vin signal ending at 3ms as well. Figure 23 bandpass filter shows the frequencies around 10,140 Hz are passed through while other signals are attenuated. Figure 24 shows the 6,380 Hz bandpass filter output signal.

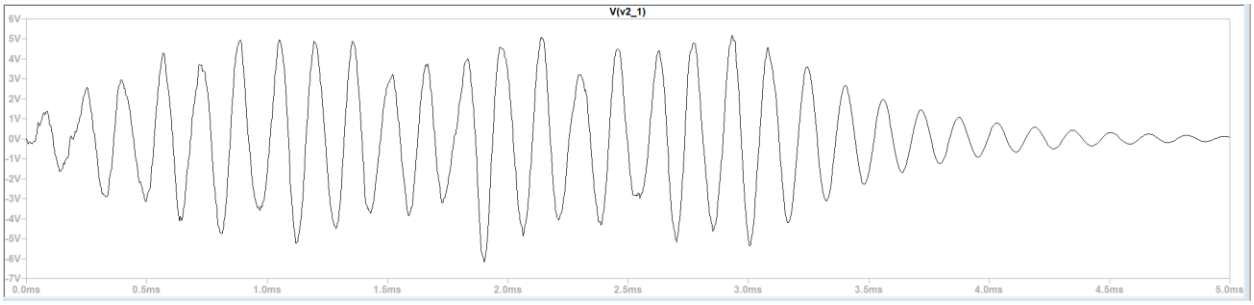

Figure 24: Transient Output Signal V2_1 Plot

Similarly in Figure 23, Figure 24 no longer shows a jagged noisy signal. Instead, a clear sinusoidal wave is shown. The number of oscillation cycles is lower compared to Figure 23 and therefore the lower frequency bandpass filter. Both Figure 23 and 24 show clear sinusoidal waveforms after attenuating other signals from its center frequency. However, the 6,380 Hz bandpass filter in Figure 24 shows a lower amplitude where peaks are ± 5V. Where amplitudes in Figure 13 display ± 10V.

Figure 25 shows both bandpass filters combine to output a single waveform.

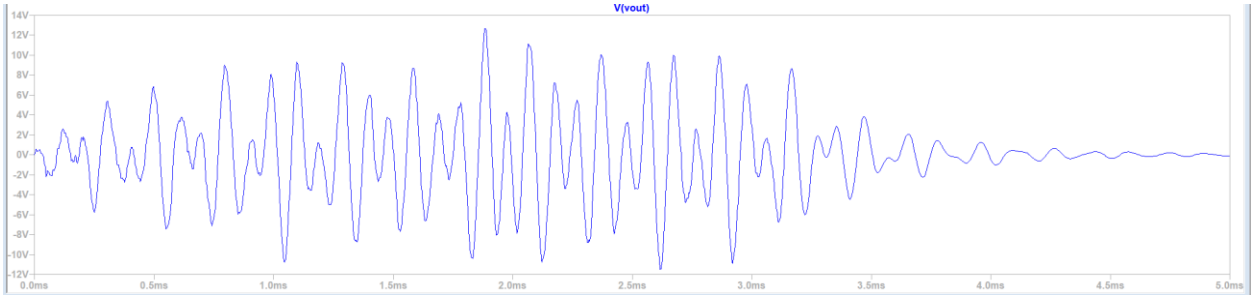

Figure 25: Transient Output Signal V_{out} Plot

Figure 25 shows the sum of the bandpass filters. Comparing Figure 22 to figure 25, the peaks are smoother which is the results of band pass filter. Figure 25 combines both outputs of the bandpass filters as well as gain applied. Figure 25 has varying

oscillations for the low, mid, and high band confirming the equalizer operating correctly. The equalizer circuit is able to extract the specific frequencies from the MATLAB generated signal to produce a single working signal.

4. BROADER IMPACTS

4.1 Public Health, Safety, and Welfare

General safety is important in every electrical system, and it is important for engineers to consider safety and reliability when designing. The design of the 2-band audio equalizer is a low voltage system and generally does not need as many precautions as other high voltage systems. However, it is still important that the system is reliable in all situations.

While designing the system, testing and simulating were done on the schematic to verify that it should operate as expected. Any issues or unexpected results of the system were handled to ensure that there are no faults in the design. The specifications of the LM741 were also considered to ensure that the circuit is operatable when manufactured.

This system can still be unsafe due to numerous reasons and should be treated with certain precautions. For the power supplies, voltage and current limiting the op-amps power rails is a very important step to ensure the system behaves reliably and is protected from unpredictable incidents that may happen. Poor grounding should also be considered because it will create unintended voltage differences in the system, which can damage the equipment.

While this system does not directly contribute to health or public safety, these systems can be commonly used in systems where reliability is important. Some examples are hearing aids and broadcasting systems.

Overall, it is important to create safe and reliable designs to limit the number of incidents that may occur. As engineers, it is one of their responsibilities that they must consider in every design.

4.2 Economy

This section will break down the cost of manufacturing compared to other similar products and also go over any constraints that may limit the manufacturing process.

The cost breakdown analysis to manufacture the design will only account for cost of components and not PCB manufacturing cost or shipping cost. The bill of materials includes 7x LM741 op-amps, 15x resistors (of different values), 2x 20k Ω potentiometers, and 7 capacitors (of different values). It will be assumed that parts will not be bought in bulk, which could potentially decrease the price of the system. The LM741 can be bought from Texas Instruments for $0.86 [3]. A fair estimate of the resistors and capacitors components is $0.10 for the non-variables, and $1.00 per potentiometer. When adding the price of all the components, the total cost is $10.22

Obtaining these components is accessible and easy to obtain because they are common components. The LM741 model is a specific model op-amp, which can be acceptable to supply chain issues if Texas Instruments stops manufacturing, goes bankrupt, and many other reasons. However, op-amps are another common component and can easily be substituted.

Generally, the audio equalizer market ranges in the hundreds for low-end equipment, and in the thousands for high end audio equalizers. There is a similar product, a 7-band audio equalizer with a 12dB gain, listed for $31.04. It still should be noted that there are some specification differences, as well as extra systems included.

There are a few minor manufacturing constraints for the audio equalizer, such as resistor values not being exact and any manual calibration it may need while being manufactured. Generally, the manufacturing constraints are mainly tied to the accuracy of the system.

In conclusion, there are many economic factors to consider while designing an audio equalizer.

4.3 Environmental Factors

This section will explain the environmental impact that this design has. In this design, a variety of components and materials are used for it. From *A Lean Based Overview on Sustainability of Printed circuit Board Production Assembly,* the authors state PCBs are a ‘compound of complex composition of hazardous materials, and,

therefore, a rather complex product for recycling' [4]. Due to the high complexities of PCB, there are high labor costs and hazardous risk in the recycling process. While our design is general, and does not include information on manufacturing, it is implied that PCBs will be used to implement the design. So, it should be assumed there are disposable issues tied to the design.

The manufacturing process of our design also includes some environmental impacts such as increase energy consumption, greenhouse gas emissions, and resource depletion. These impacts are caused by a variety of factors, such as transportation/shipping of components, semiconductor manufacturing for our op-amps, and the copper, silicon, and plastic.

There are many difficulties tied to electrical designing and manufacturing. However, it is important for engineers to consider environmental factors in their design process to limit these consequences.

5. CONCLUSION

The overall equalizer circuit was successfully designed and simulated with expected results. Initially, component values needed to be determined through transfer functions of each stage in the bandpass filter. The final transfer function and component values were confirmed using MATLAB.

In part B, individual bandpass filters are designed in LTspice using the values calculated from part A. The operational amplifier LM741 was utilized before switching to an ideal operational amplifier to yield more accurate results. Simulations were performed through AC and transient simulations to further ensure the circuit function as expected.

After confirming functionality, both individually designed bandpass filters are modeled together in the final equalizer circuit. Where potentiometers are modeled to control each bandpass filter. Simulating the circuit with different wiper conditions allowed for further understanding of the effect on magnitude. A noisy signal was used as V_{in} where V_{out} was compared and analyzed.

In conclusion, the results proved the theoretical equalizer circuit to separate a range of frequencies. The project utilizes operational amplifiers in a practical application

such as signal processing. Through simulations and analysis, the equalizer circuit demonstrated how signals are processed through filters in order to achieve a single desired output.

6. REFERENCES

[1] B. Singh, K. Al-Haddad, “A Review of Active Filters for Power Quality Improvement,” IEEE Transactions on Industrial Electronics, Vol. 46, No. 5, pp. 960 – 972, Oct. 1999. ieeexplore.ieee.org/stamp/stamp.jsp?tp=&arnumber=793345

[2] J. Houle, “ECE 212 Fall 2025 Design Project – Final Report”, Boise State University. Accessed: November 18, 2025. boisestatecanvas.instructure.com/courses/40083/files/21698444?wrap=1

[3] “LM741 Operational Amplifier,” Texas Instruments. Accessed: December 1, 2025. ti.com/product/LM741

[4] A. Esfandyari, “A Lean Based Overview on Sustainability of Printed Circuit-Board Assembly Proccesses,” Elseveir, Vol. 26, pp. 305-310, 2015. sciencedirect.com/science/article/pii/S2212827114008725

APPENDIXES

Appendix 1: Derivations of Transfer Functions

Note, C_1= C_2= C is used for substitution for ease of simplification

A KCL can be applied to figure 5,

$$\frac{V_4}{R_6}+\frac{V_{in}}{R_1}+\frac{V_2}{\frac{R_2}{j\omega R_2 C+1}}=0$$

Factoring out the voltages as well as rearranging equations as follows,

$$V_4\left(\frac{1}{R_6}\right)+V_2\left(\frac{\frac{1}{R_2}}{j\omega R_2 C+1}\right)=-V_{in}(\frac{1}{R_1})$$

A substitution for the node voltage of V_4 and V_3 is as follows,

$$V_4=V_3(\frac{-R_5}{R_4})$$

$$V_3=V_2(\frac{-1}{j\omega R_3 C})$$

Substituting back into the equation and rearranging allows for,

$$V_2\left(\frac{-1}{j\omega R_3 C}\right)\left(\frac{-R_5}{R_4 R_6}\right)+V_2\left(\frac{j\omega R_2 C+1}{R_2}\right)=-V_{in}(\frac{1}{R_1})$$

Factoring V_2 out of the equation as well as uniting under a common denominator as follows,

$$V_2\left(\frac{R_2R_5+(j\omega R_2C+1)(j\omega R_3R_4R_6C)}{j\omega R_2R_3R_4R_6C}\right)=-V_{in}(\frac{1}{R_1})$$

The voltage V_{in} is divided to the V_2's side and the denominator is multiplied to the other side,

$$(\frac{V_2}{V_{in}})(R_2R_5+(j\omega R_2C+1)(j\omega R_3R_4R_6C))=-(\frac{j\omega R_2R_3R_4R_6C}{R_1})$$

The variables other than V_2 or V_{in} are divided to the other side of the equation to get the transfer function. The denominator is multiplied out before being put into standard form.

$$\frac{V_2}{V_{in}}=-(\frac{j\omega R_2R_3R_4R_6C}{R_1R_2R_5+(j\omega)^2R_1R_2R_3R_4R_6C^2+j\omega R_1R_3R_4R_6C})$$

Further simplification is used where resistor values are assumed to be $R_u = R_4 = R_5$ and $R = R_3 = R_6$.

$$\frac{V_2}{V_{in}} = -\left(\frac{j\omega R_2 R^2 R_u C}{R_1 R_2 R_u + (j\omega)^2 R_1 R_2 R_u R^2 C^2 + j\omega R_1 R^2 R_u C}\right) \tag{3}$$

Next, R_u appears in the numerator and denominator and thus be canceled out. The equation as follows will be multiplied to the numerator and denominator to achieve the standard form

$$\frac{V_2}{V_{in}} = -\left(\frac{j\omega R_2 R^2 C}{R_1 R_2 + (j\omega)^2 R_1 R_2 R^2 C^2 + j\omega R_1 R^2 C}\right) * \left(\frac{\frac{1}{R_1 R_2 R^2 C^2}}{\frac{1}{R_1 R_2 R^2 C^2}}\right)$$

Simplification and rearranging yields the final transfer function

$$H_1(j\omega) = \left[\frac{j\omega\left(\frac{R_2}{R_1}\right)\left(\frac{1}{R_2 C}\right)}{(j\omega)^2 + (j\omega)\left(\frac{1}{R_2 C}\right) + \left(\frac{1}{R^2 C^2}\right)}\right] \tag{4}$$

The following equation is the standard equation format

$$H(j\omega) = \frac{j\omega K\beta}{(j\omega)^2 + j\omega\beta + \omega^2}$$

Appendix 2: Determining Center Frequencies

Each bandpass filter will have their unique center frequency, one will be the higher frequency and the other the lower frequency. The center frequency is found by using the BSU ID number found on student cards. The last 4 digits of the ID number will be used, if the frequency starts with a ‘0’, ‘0’ will be replaced as ’10.’ For privacy reasons, values before the last 4 digits will be hidden.

1 2 3 4 5 <u>6</u> <u>3</u> <u>8</u> <u>0</u> = 6,380 Hz = f_0

1 2 3 4 5 <u>0</u> <u>1</u> <u>4</u> <u>0</u> = 10,140 Hz = f_0

Appendix 3: Component Value Calculations

Utilizing the transfer function found in Appendix A,

$$H_1(j\omega) = [\frac{j\omega\left(\frac{R_2}{R_1}\right)\left(\frac{1}{R_2C}\right)}{(j\omega)^2 + (j\omega)\left(\frac{1}{R_2C}\right) + \left(\frac{1}{R^2C^2}\right)}]$$

The following equations are derived from the transfer function which are,

$$K = \frac{R_2}{R_1} \tag{5}$$

$$\beta = \frac{1}{R_2C} \tag{6}$$

$$\omega_0 = \frac{1}{RC} \tag{7}$$

$$Q = \frac{R_2}{R} \tag{8}$$

The following equation is used to convert angular frequency to Hertz.

$$f_0 = \frac{\omega_0}{2\pi} \tag{9}$$

Given the gain and quality factor are predetermined to be Q = 10, and gain K = 5 V/V. As well as capacitor value given as 0.01 μF. Note, the center frequency of 10,140 Hz or 63,711 radians per second will be used to calculate component values. The same process is used in determining the 6,380 Hz bandpass filter's components values with the exception of R_u = 10,000 Ω.

The variable R is first calculated using equation (w0 = 1/RC equation), rearranging to solve for R as,

$$R = \frac{1}{\omega_0 C} = \frac{1}{63{,}711 * 0.01\mu}$$

The equation yields R = 1,569.6 Ω.

Next, equation (Q equation) is used where rearranging to solve for R_2 as,

$$R_2 = Q * R = 10 * 1{,}569.6$$

The equation yields R_2 = 15,696 Ω.

Using equation (gain equation K), rearranging to solve for R_1 as,

$$R_1 = \frac{R_2}{K} = \frac{15{,}696}{5}$$

The equation yields R_1 = 3,139.2 Ω.
Since R_u is not included in the transfer function, R_u will be determined as R < R_u < R_2 [2]. R_u will have to have a resistance value between 1,569.6 Ω and 15,696 Ω, thus a chosen value of 5,000 Ω has been chosen.